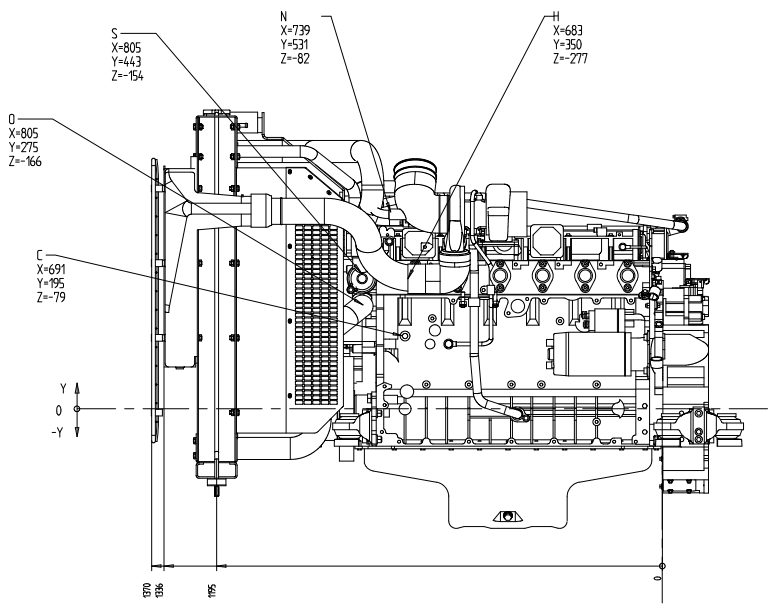

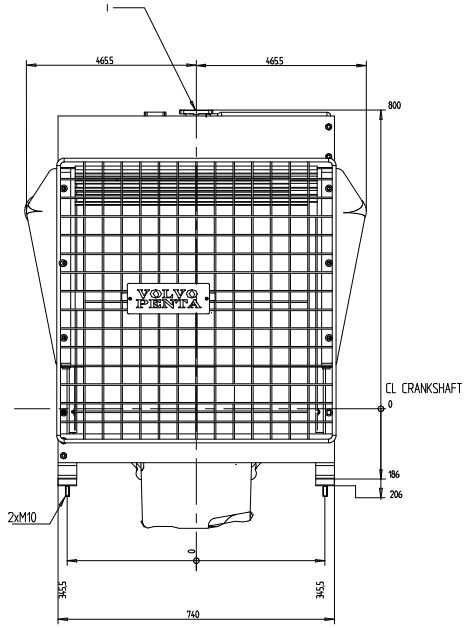

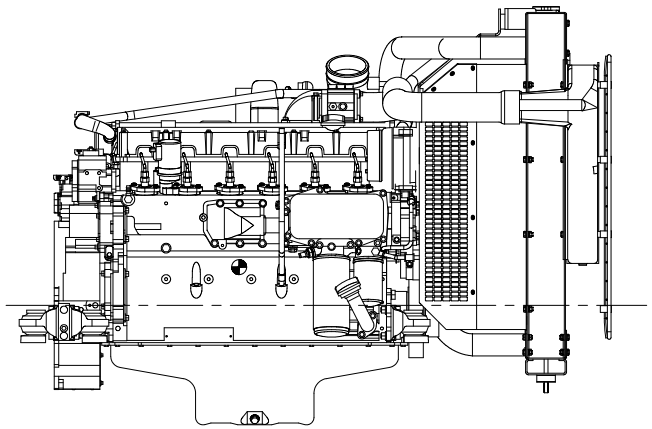

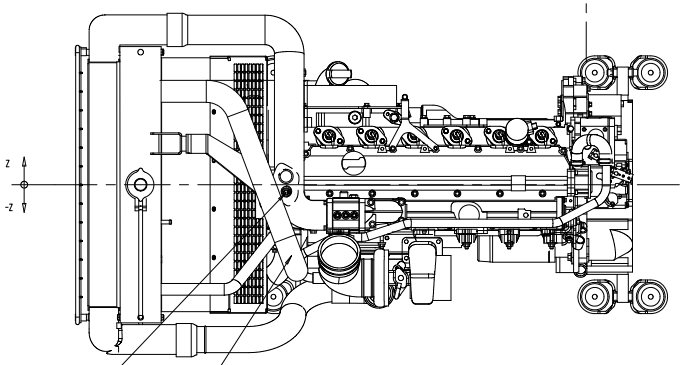

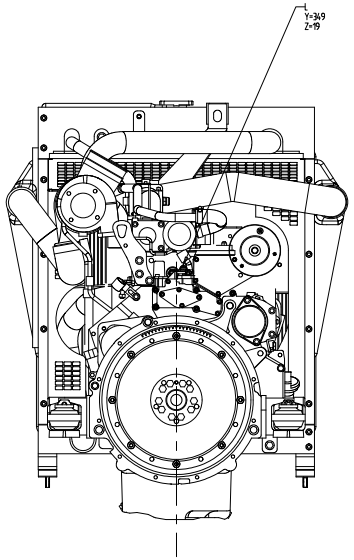

B
X=806
Y=449
Z=-21

V
X=790
Y=410
Z=-190

SCALE 1:5

B = FROM EXPANSION TANK Ø=22mm

C = COOLANT DRAIN M14x1.5

H = TO CHARGE AIR COOLER

I = COOLANT FILLING

L = COOLANT TEMP SWITCH/SENDER

N = AIR INTAKE FROM AIR COOLER Ø=71mm

O = WATER INLET Ø=50mm

S = WATER OUTLET Ø50mm

V = AIR VENT HOSE Ø=6mm AND Ø=10mm

Engineering Release Date/Sign	Location	Change description / Change number / Modified	P/A - Modified: 0 1 8 Modified NO	Document status status: RELEASED

SYMBOLS, DESIGNATIONS AND GENERAL DRAWING PRINCIPLES STD 191-0003

The copying, distribution and utilization of this document as well as the communication of its contents to others without express authorization is prohibited. Offenders are liable to the payment of damages. All rights reserved in the event of the grant of a patent, utility model or ornamental design registration.

VOLVO PENTA

Document title: ENGINE DIMENSIONS TAD620VE

Document type: DIMENSION DRAWING

Outer dimensions only

Document No: 21627439 | Issue index: 01 | Sheet No: 1 | 1 | 1

Scale: 1:5